Multiple Extrication Tool Holders
Models QM-MEH-1 & QM-MEH-_-R
Parts and Information Manual

ZICO®

3095PM16R

Rev. 8-9-19

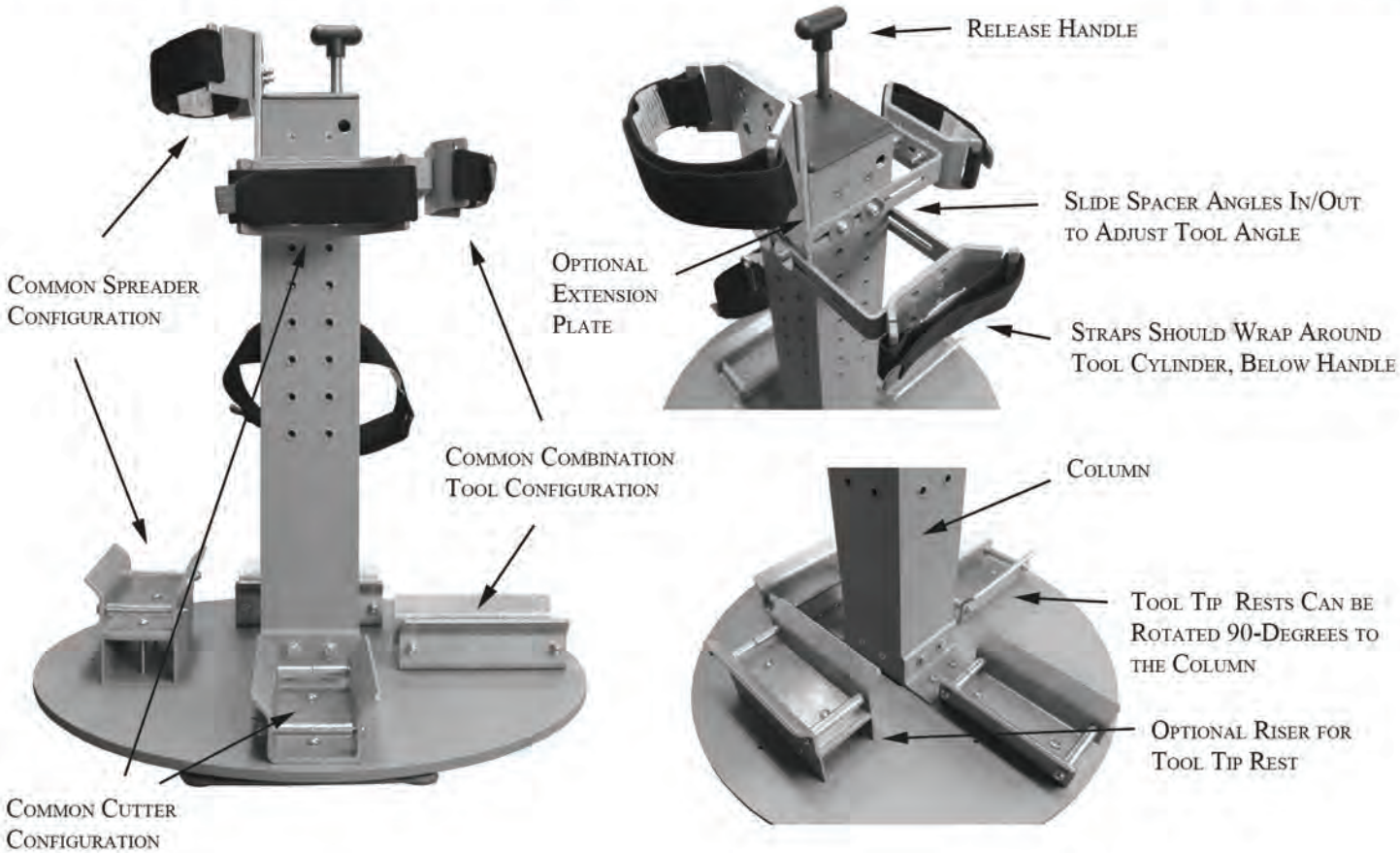

I. MODELS AVAILABLE

QM-MEH-1: Multiple Extrication Tool Holder
QM-MEH-1-R: Multiple Extrication Tool Holder with One Ram Mount
QM-MEH-2-R: Multiple Extrication Tool Holder with Two Ram Mounts

II. BASE ASSEMBLY

1. Attach the angled Base Plate Brackets (17) to opposite sides of the square hole in the Tool Base Plate (16) using fasteners provided (29, 31, 44). Set Tool Base Plate aside.

2. On each side of the Column (7), towards the bottom, locate the pair of flat head screws (25). Remove two pairs of screws on opposite sides of the Column, four screws total.

3. Slide the Tool Base Plate over the Column so that the holes in the Base Plate Brackets align with the now empty holes at the bottom of the Column. Attach Tool Base Plate Brackets to Column using fasteners provided. Tighten.

4. Attach Cap/Plug (11) to top of Column. Attach Tee Handle (13) to Release Rod (8).

III. APPARATUS INSTALLATION

Using holes in the Base Casting (1) as a guide, mount Base Casting to compartment or slide-out tray using 3/8" diameter, TYP4X hardware (not provided).

IV. OPERATION

The Multiple Extrication Tool Holder is designed to lock into four, 90-degree positions.

To rotate, lift the Tee Handle and rotate the tools in either direction until reaching the tool you wish to access. Release the Tee Handle and the Release Rod will drop into the nearest locking hole to secure the unit.

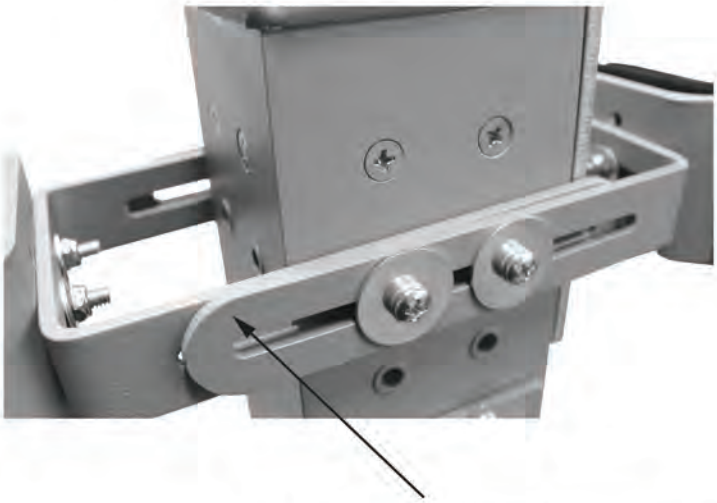

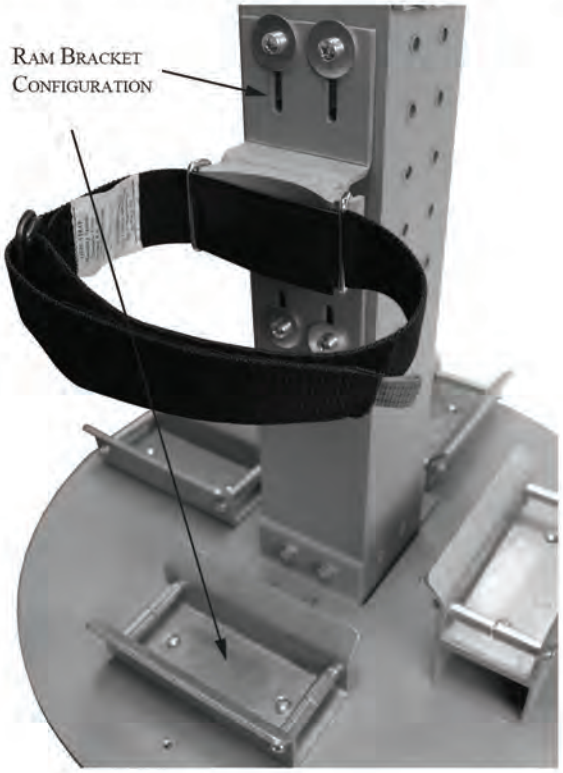

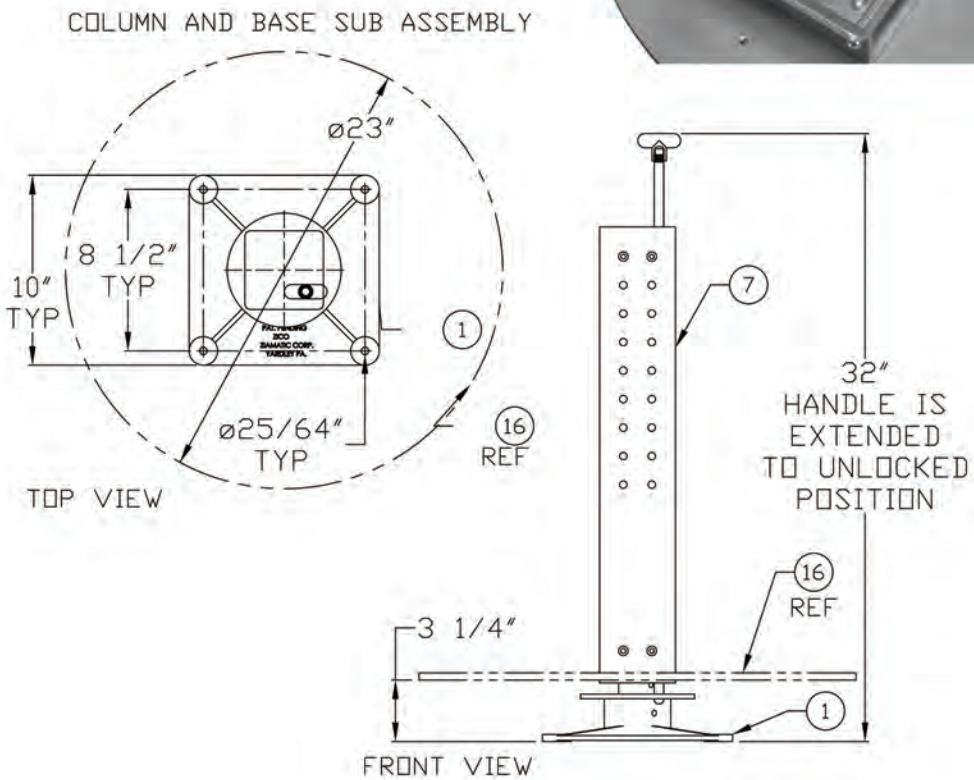

ITEM	PART NO.	DESCRIPTION	QTY
1	1035 105 105	BASE CASTING	1
2	3095 260 101	POST 1 1/4 DIA	1
3	3095 260 103	2OD X 1 9/32ID X1/2 NYLON 6-6 SPACER	1
4	3095 260 105	INDEXED PLATE	1
5	3095 260 107	INNER BEARING PLATE	3
6	3095 260 109	PLATE SPACER	4
7	3095 260 111	COLUMN	1
8	3095 260 113	RELEASE ROD	1
9	1035 105 145	BEARING,OILITE FF-1505-5	3
10	1035 105 150	COLLAR, RULAND MFG CL20F	1
11	3095 260 115	CAP/PLUG LDPE	1
12	3095 260 117	SPRING, LEE SPRING,LC 063J 06M	1
13	3095 260 119	TEE HANDLE, DAVIES MOLDING 3081-F (1/2"-13)	1
14	9040-103132	SPRING PIN, ø5/16x2" LG.	2
15	9040-101516	SPRING PIN, ø5/32x1" LG.	2
16	3095 260 121	TOOL BASE PLATE	1
17	3095 260 123	BASE PLATE BRACKET	2
25	9110-162512	SCREW, 1/4-20x3/4" FLHD 100°CSK	12
26	9012-272500	NUT INSERT, 1/4-20	64
28	9014-202500	LOCK WASHER, ø1/4"	18

ITEM	PART NO.	DESCRIPTION	QTY
29	9014-112500	1/4" FLAT WASHER	12
30	9010-102516	SCREW, 1/4-20x1" HEX HD ZPS	4
31	9015-172500	NYLOCK NUT, 1/4-20 GR5 ZPS	20
32	9014-162500	WASHER, ø1/4xø1 1/4" FENDER	16
38	0000 000 149	BLANK MODEL TAG W/PAT PEND.	1
44	9015-102520	SCREW,1/4-20 x 1 1/4, HEX HD	4
61	3095 260 143	RISER, TOOL TIP REST	1
62	3095 260 145	TOOL TIP REST	4
63	3095-260-	SPACERS, ø1/4xø1/2x1 5/16	16
64	9010-222556	SCREW,1/4-20x3 1/2, PAN PH	8
65	9010-222540	SCREW,1/4-20x2 1/2, PAN PH	2
66	9010-222508	SCREW,1/4-20x1/2, PAN PH	8
68	9010-162516	SCREW,1/4-20x1", CSK PH	8
69	9010-222516	SCREW,1/4-20x1", PAN PH	16
70	3095 260 139	EXTENSION PLATE	1
71	3095 260 141	SPACER ANGLE	8
72	3095 260 131	BRACKET, SCRAP	4
73	3099 736 000	STRAP, UMVS-1116-11	4
74	3099 734 000	STRAP, UMVS-0811-11	1

NOTE: IMAGE FOR REFERENCE. MOUNT WITH EXTENSION PLATE (70) OR SPACER ANGLES (71) BUT NOT BOTH ON THE SAME SIDE OF COLUMN.

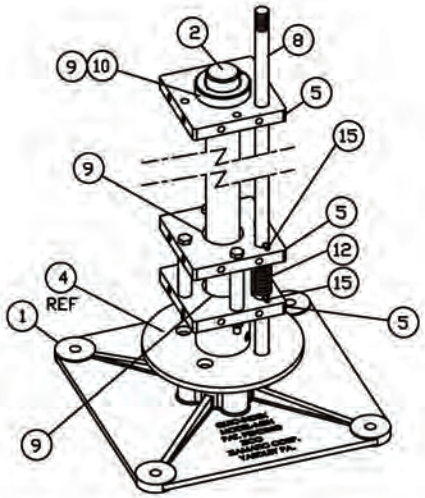

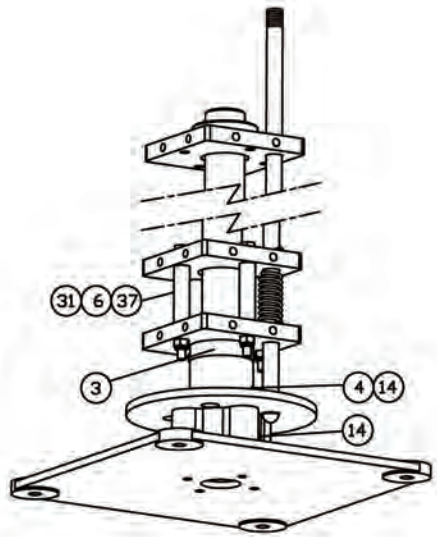

ADDITIONAL SHORTER STRAP SUPPLIED

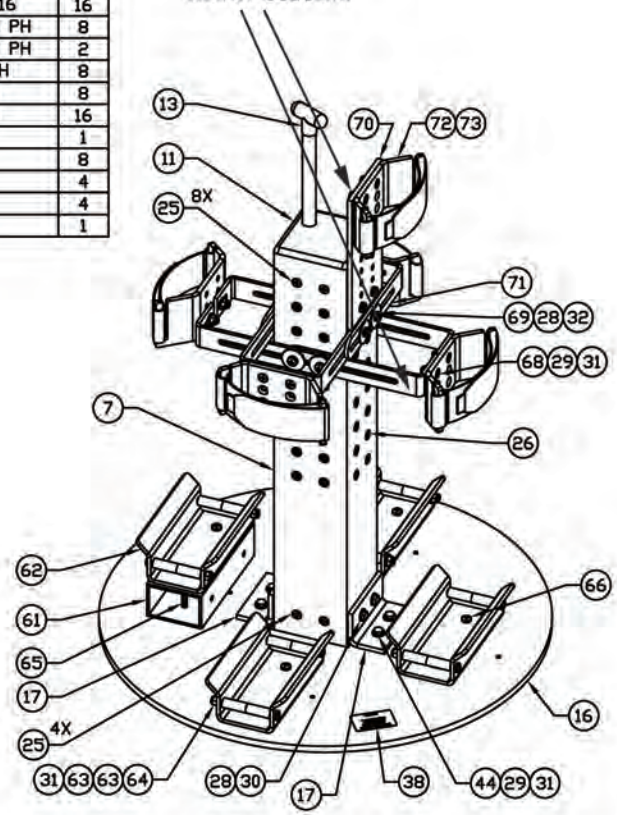

SMALLER STRAP SHOULD BE USED WITH TOOLS THAT HAVE THINNER CYLINDERS, SUCH AS COMBINATION TOOLS

MODEL QM-MEH-1

ITEM	PART NO.	DESCRIPTION	QTY
1	1035 105 105	BASE CASTING	1
2	3095 260 101	POST 1 1/4 DIA	1
3	3095 260 103	20D X 1 9/32ID X1/2 NYLON 6-6 SPACER	1
4	3095 260 105	INDEXED PLATE	1
5	3095 260 107	INNER BEARING PLATE	3
6	3095 260 109	PLATE SPACER	4
7	3095 260 111	COLUMN	1
8	3095 260 113	RELEASE ROD	1
9	1035 105 145	BEARING,OILITE FF-1505-5	3
10	1035 105 150	COLLAR, RULAND MFG CL20F	1
11	3095 260 115	CAP/PLUG LDPE	1
12	3095 260 117	SPRING, LEE SPRING,LC 063J 06M	1
13	3095 260 119	TEE HANDLE, DAVIES MOLDING 3081-F (1/2"-13)	1
14	9040-103132	SPRING PIN, ø5/16x2" LG.	2
15	9040-101516	SPRING PIN, ø5/32x1" LG.	2
16	3095 260 121	TOOL BASE PLATE	1
17	3095 260 123	BASE PLATE BRACKET	2
25	9110-162512	SCREW, 1/4-20x3/4" FLHD 100°CSK	12
26	9012-272500	NUT INSERT, 1/4-20	64
28	9014-202500	LOCK WASHER, ø1/4"	22

ITEM	PART NO.	DESCRIPTION	QTY
29	9014-112500	1/4" FLAT WASHER	12
30	9010-102516	SCREW, 1/4-20x1" HEX HD ZPS	4
31	9015-172500	NYLOCK NUT, 1/4-20 GR5 ZPS	20
32	9014-162500	WASHER, ø1/4xø1 1/4" FENDER	16
38	0000 000 149	BLANK MODEL TAG W/PAT PEND.	1
44	9015-102520	SCREW,1/4-20 x 1 1/4, HEX HD	4
50	3095-265-901	HANGING RAM ASSY	1
51	3099-247-105	7"BASE STRAP,CYBS-2123-70-11	1
52	3099-000-006	"D" RING,NICKEL PLATE,2" LOOP	2
61	3095 260 143	RISER, TOOL TIP REST	1
62	3095 260 145	TOOL TIP REST	4
63	3095-260-147	SPACERS, ø1/4xø1/2x1 5/16	16
64	9010-222556	SCREW,1/4-20x3 1/2, PAN PH	8
65	9010-222540	SCREW,1/4-20x2 1/2, PAN PH	2
66	9010-222508	SCREW,1/4-20x1/2, PAN PH	8
68	9010-162516	SCREW,1/4-20x1", FH PH	8
69	9010-222516	SCREW,1/4-20x1", PAN PH	16
70	3095 260 139	EXTENSION PLATE	1
71	3095 260 141	SPACER ANGLE	6
72	3095 260 131	BRACKET, QUICK GRIP STRAP	3
73	3099 736 000	STRAP, UMVS-1116-11	3
74	3099 734 000	STRAP, UMVS-0811-11	1

NOTE: IMAGE FOR REFERENCE. MOUNT WITH EXTENSION PLATE (70) OR SPACER ANGLES (71) BUT NOT BOTH ON THE SAME SIDE OF COLUMN.

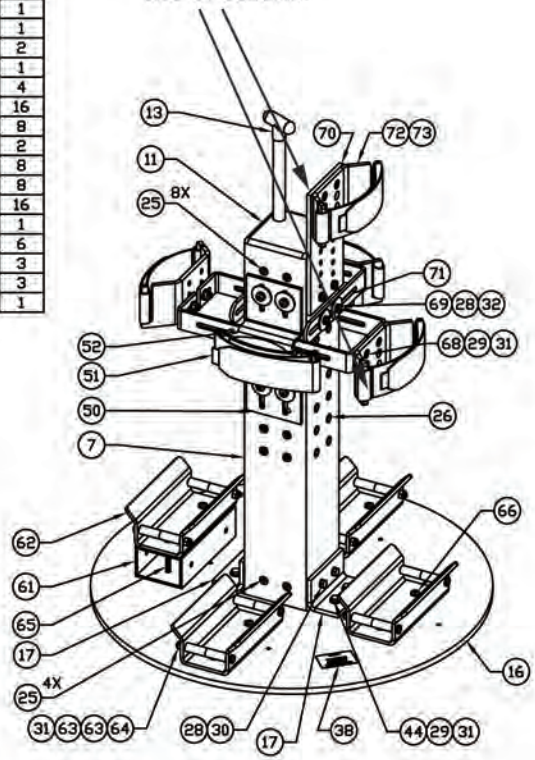

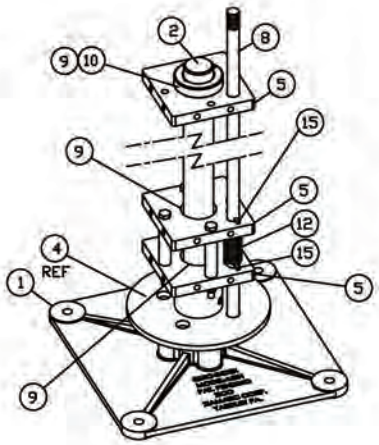

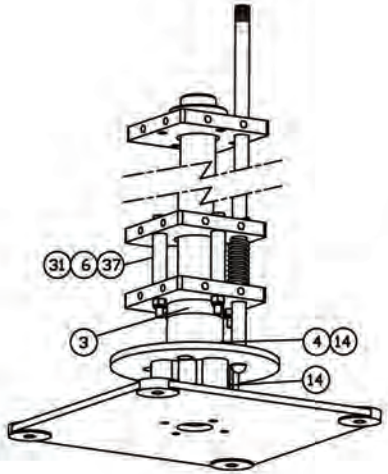

ADDITIONAL SHORTER STRAP SUPPLIED.

SMALLER STRAP SHOULD BE USED WITH TOOLS THAT HAVE THINNER CYLINDERS, SUCH AS COMBINATION TOOLS

MODEL QM-MEH-1-R

ZICO Ziamatic Corp.
10 West College Avenue, P.O. Box 337, Yardley, PA 19067-0587 • (215) 493-3618 • FAX: (215) 493-1401
TOLL FREE: 800-711-3473
www.ziamatic.com

*ZICO is a registered trademark for fire, safety and marine products made by Ziamatic Corp.
Copyright Ziamatic Corp. 8-18